RUNNER

Agile and narrow bike trailer



AGILE AND **NARROW TRAILER** DESIGNED FOR **URBAN DELIVERIES**

- Large trailer deck, **suitable for standardized boxes**
- Carry up to **200 kg** (440 lbs)
- Safe handling, **overrun brake**
- **Expand** your **bike's capacity** while maintaining its **fluidity in traffic**

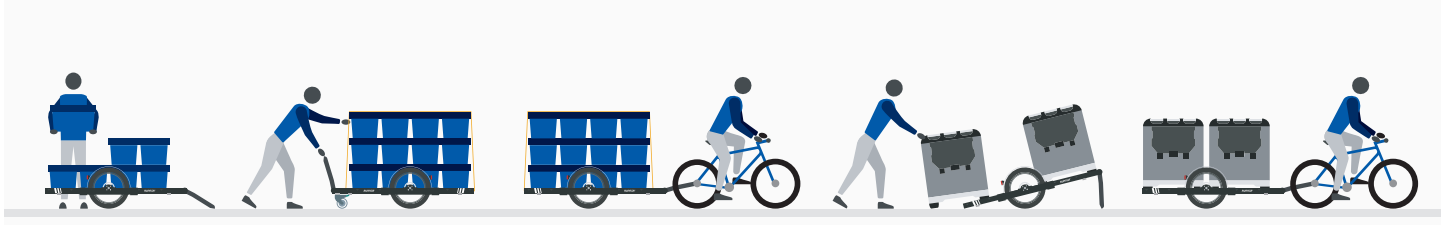

FlexiModal – FRANCE
contact@fleximodal.fr / +33 (0)2 22 930 940

V2.0 - april 2022

Safety

1. **Handling:**
Low center of gravity – **high stability**

2. **Secure the Load:**
Strap down the cargo using the slots throughout the frame.

3. **Braking in every situation:**
   - **Automatically** while riding
   - **Manually** in trolley mode
   - Locked in **parking mode** while loading

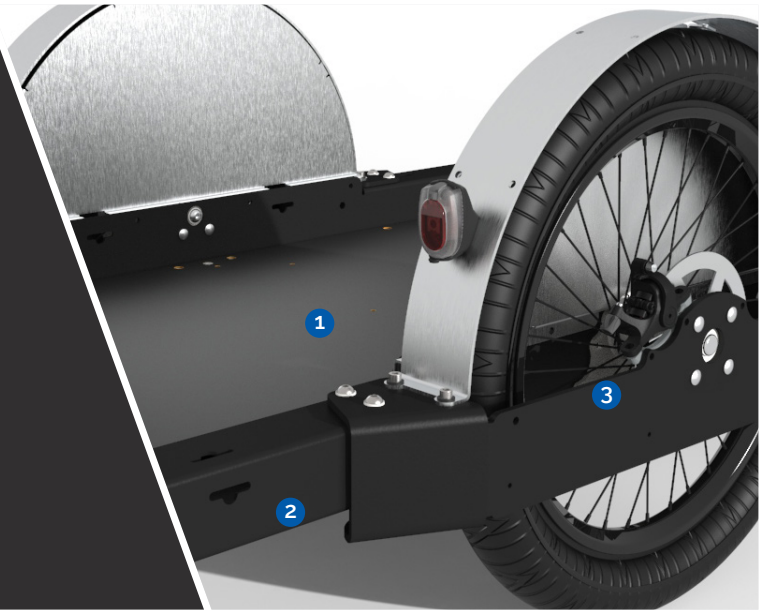

Features



1. Width: 89 cm (35''), **suitable for bike lanes**
2. **Quick and easy hitching,** connects the trailer to the bike and activates the overrun brake
3. **Multiposition drawbar,** switch between parking, ramp, trolley and towing position
4. **Ramp position**, loading of modules on wheels made easy
5. Trailer deck: 65 x 165 cm, **suitable for standardized boxes** (40 x 60 cm)

Technical Data*

Overall width	89 cm / 35''	Max payload	200 kg / 440 lbs
Length	225 cm / 89''	Empty weight	30 kg / 66 lbs
Ground clearance	16 cm / 6.29''	Loading area	65 x 165 cm / 25'' x 65''